BKH type (High rupturing capacity)

CE 10000 3

Certificate

BKH 1P

Technical data

Standard	Confirming to IEC 60947-2
Approval	CCC, SEMKO CB, CE, SABS
Protection	Overload and short circuit
Rated current in	63, 80, 100, 125A
Rated voltage	1pole 230VAC 50/60Hz
	2, 3, 4pole 400VAC 50/60Hz
Breaking capacity	10kA
Characteristic	C, D curve
Number of poles	1P, 2P, 3P, 4P
Type of trip	Thermal magnetic release
Type of terminal	Lug type
Terminal capacity	Cables up to 50mm^2
Installation	Mounting on 35mm DIN rail
Width	27mm per pole
Electrical endurance	1,500 operations

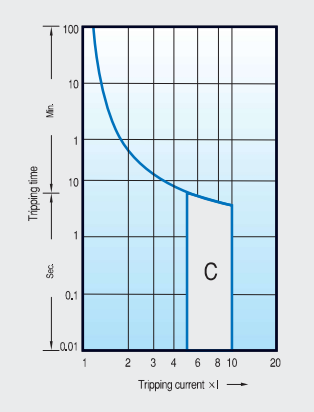

C curve

Type	In	Model	Order No.	Pack. unit (Pcs.)	Price
1P	63A	BKH 1P C63A	06110329R0	72	
	80A	BKH 1P C80A	06110330R0	72	
	100A	BKH 1P C100A	06110331R0	72	
	125A	BKH 1P C125A	06110332R0	72	
2P	63A	BKH 2P C63A	06110337R0	36	
	80A	BKH 2P C80A	06110338R0	36	
	100A	BKH 2P C100A	06110339R0	36	
	125A	BKH 2P C125A	06110340R0	36	
3P	63A	BKH 3P C63A	06110345R0	24	
	80A	BKH 3P C80A	06110346R0	24	
	100A	BKH 3P C100A	06110347R0	24	
	125A	BKH 3P C125A	06110348R0	24	
4P	63A	BKH 4P C63A	06110361R0	18	
	80A	BKH 4P C80A	06110362R0	18	
	100A	BKH 4P C100A	06110363R0	18	
	125A	BKH 4P C125A	06110364R0	18	

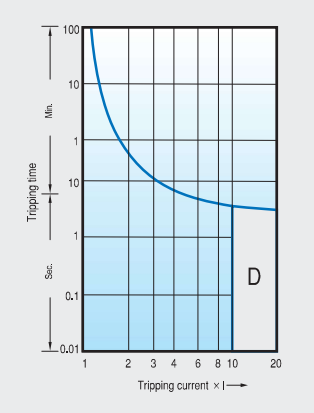

D curve

Type	In	Model	Order No.	Pack. unit (Pcs.)	Price
1P	63A	BKH 1P D63A	06110333R0	72	
	80A	BKH 1P D80A	06110334R0	72	
	100A	BKH 1P D100A	06110335R0	72	
	125A	BKH 1P D125A	06110336R0	72	
2P	63A	BKH 2P D63A	06110341R0	36	
	80A	BKH 2P D80A	06110342R0	36	
	100A	BKH 2P D100A	06110343R0	36	
	125A	BKH 2P D125A	06110344R0	36	
3P	63A	BKH 3P D63A	06110349R0	24	
	80A	BKH 3P D80A	06110350R0	24	
	100A	BKH 3P D100A	06110351R0	24	
	125A	BKH 3P D125A	06110352R0	24	
4P	63A	BKH 4P D63A	06110365R0	18	
	80A	BKH 4P D80A	06110366R0	18	
	100A	BKH 4P D100A	06110367R0	18	
	125A	BKH 4P D125A	06110368R0	18	

BFN type

BFN

Technical data

Standard	IEC 60947-2
Approval	SEMKO CB, CE
Protection	Overload and short circuit
Rated current	5, 10, 15, 20, 25, 30, 40, 50A
Rated voltage	1pole 10kA at 230VAC 2, 3pole 10kA at 400VAC
Breaking capacity	10kA
Number of poles	1, 2, 3pole
Type of trip	Thermal magnetic release
Type of terminal	Lug type (14-6 AWG.)
Installation	Plug-in
Width	60mm
Slot	56mm
Accessory	Not available

BFN 10kA at 230/400VAC

1pole				
In	**Model**	**Order No.**	**Pack. unit (Pcs.)**	**Price**
5A	BFN 1P 5A	06110704R0	120	
10A	BFN 1P 10A	06110705R0	120	
15A	BFN 1P 15A	06110706R0	120	
20A	BFN 1P 20A	06110707R0	120	
30A	BFN 1P 30A	06110708R0	120	
40A	BFN 1P 40A	06110709R0	120	
50A	BFN 1P 50A	06110711R0	120	
Weight/pc		0.14kg		

2pole				
In	**Model**	**Order No.**	**Pack. unit (Pcs.)**	**Price**
5A	BFN 2P 5A	06120681R0	60	
10A	BFN 2P 10A	06120682R0	60	
15A	BFN 2P 15A	06120683R0	60	
20A	BFN 2P 20A	06120684R0	60	
30A	BFN 2P 30A	06120685R0	60	
40A	BFN 2P 40A	06120686R0	60	
50A	BFN 2P 50A	06120687R0	60	
Weight/pc		0.29kg		

3pole				
In	**Model**	**Order No.**	**Pack. unit (Pcs.)**	**Price**
5A	BFN 3P 5A	06130239R0	40	
10A	BFN 3P 10A	06130240R0	40	
15A	BFN 3P 15A	06130241R0	40	
20A	BFN 3P 20A	06130242R0	40	
30A	BFN 3P 30A	06130243R0	40	
40A	BFN 3P 40A	06130244R0	40	
50A	BFN 3P 50A	06130245R0	40	
Weight/pc		0.43kg		

BKP type

Certificate

RKP 1P+N

Technical data

Protection		Ground fault and overcurrent
Rated current in		3 (C, D curve), 6, 10, 16, 20, 25, 32A (B, C, D curve)
Rated residual current		
Operating, $I_{\triangle n}$		30, 100, 300mA (Non-adjustable)
	Non-operating, $I_{\triangle no}$	$0.5I_{\triangle n}$
	Number of poles	1P+N
Rated voltage		230VAC
Residual current off-time		≤ 0.1 sec.
Standard		IEC 61009
Approval		CCC, SEMKO CB, CE, SABS
Type of trip		
	Ground fault	Electronic
	Overcurrent	Thermal-magnetic
Breaking capacity		4.5kA
Electrical endurance		4,000 operations
Mount		On 35mm DIN rail
Width		9mm per pole
Terminal		Lug type (Cable up to 10mm²)

RKP B curve

In	$I_{\triangle n}$	Model	Order No.	Pack. unit (Pcs.)
3A	30mA	Not applicable	Not applicable	Not applicable
	100mA	Not applicable	Not applicable	Not applicable
	300mA	Not applicable	Not applicable	Not applicable
6A	30mA	RKP 1P+N B6A 30mA	06220123R0	60
	100mA	RKP 1P+N B6A 100mA	06220124R0	60
	300mA	RKP 1P+N B6A 300mA	06220125R0	60
10A	30mA	RKP 1P+N B10A 30mA	06220127R0	60
	100mA	RKP 1P+N B10A 100mA	06220128R0	60
	300mA	RKP 1P+N B10A 300mA	06220129R0	60
16A	30mA	RKP 1P+N B16A 30mA	06220131R0	60
	100mA	RKP 1P+N B16A 100mA	06220132R0	60
	300mA	RKP 1P+N B16A 300mA	06220133R0	60
20A	30mA	RKP 1P+N B20A 30mA	06220135R0	60
	100mA	RKP 1P+N B20A 100mA	06220136R0	60
	300mA	RKP 1P+N B20A 300mA	06220137R0	60
25A	30mA	RKP 1P+N B25A 30mA	06220139R0	60
	100mA	RKP 1P+N B25A 100mA	06220140R0	60
	300mA	RKP 1P+N B25A 300mA	06220141R0	60
32A	30mA	RKP 1P+N B32A 30mA	06220143R0	60
	100mA	RKP 1P+N B32A 100mA	06220144R0	60
	300mA	RKP 1P+N B32A 300mA	06220145R0	60

RKP type

Certificate

RKP 1P+N

RKP C curve

In	I△n	Model	Order No.	Pack. unit (Pcs.)
3A	30mA	RKP 1P+N C3A 30mA	06220147R0	60
	100mA	RKP 1P+N C3A 100mA	06220148R0	60
	300mA	RKP 1P+N C3A 300mA	06220149R0	60
6A	30mA	RKP 1P+N C6A 30mA	06220151R0	60
	100mA	RKP 1P+N C6A 100mA	06220152R0	60
	300mA	RKP 1P+N C6A 300mA	06220153R0	60
10A	30mA	RKP 1P+N C10A 30mA	06220155R0	60
	100mA	RKP 1P+N C10A 100mA	06220156R0	60
	300mA	RKP 1P+N C10A 300mA	06220157R0	60
16A	30mA	RKP 1P+N C16A 30mA	06220159R0	60
	100mA	RKP 1P+N C16A 100mA	06220160R0	60
	300mA	RKP 1P+N C16A 300mA	06220161R0	60
20A	30mA	RKP 1P+N C20A 30mA	06220163R0	60
	100mA	RKP 1P+N C20A 100mA	06220164R0	60
	300mA	RKP 1P+N C20A 300mA	06220165R0	60
25A	30mA	RKP 1P+N C25A 30mA	06220167R0	60
	100mA	RKP 1P+N C25A 100mA	06220168R0	60
	300mA	RKP 1P+N C25A 300mA	06220169R0	60
32A	30mA	RKP 1P+N C32A 30mA	06220171R0	60
	100mA	RKP 1P+N C32A 100mA	06220172R0	60
	300mA	RKP 1P+N C32A 300mA	06220173R0	60

RKP D curve

In	I△n	Model	Order No.	Pack. unit (Pcs.)
3A	30mA	RKP 1P+N D3A 30mA	06220175R0	60
	100mA	RKP 1P+N D3A 100mA	06220176R0	60
	300mA	RKP 1P+N D3A 300mA	06220177R0	60
6A	30mA	RKP 1P+N D6A 30mA	06220179R0	60
	100mA	RKP 1P+N D6A 100mA	06220180R0	60
	300mA	RKP 1P+N D6A 300mA	06220181R0	60
10A	30mA	RKP 1P+N D10A 30mA	06220183R0	60
	100mA	RKP 1P+N D10A 100mA	06220184R0	60
	300mA	RKP 1P+N D10A 300mA	06220185R0	60
16A	30mA	RKP 1P+N D16A 30mA	06220187R0	60
	100mA	RKP 1P+N D16A 100mA	06220188R0	60
	300mA	RKP 1P+N D16A 300mA	06220189R0	60
20A	30mA	RKP 1P+N D10A 30mA	06220191R0	60
	100mA	RKP 1P+N D10A 100mA	06220192R0	60
	300mA	RKP 1P+N D10A 300mA	06220193R0	60
25A	30mA	RKP 1P+N D25A 30mA	06220195R0	60
	100mA	RKP 1P+N D25A 100mA	06220196R0	60
	300mA	RKP 1P+N D25A 300mA	06220197R0	60
32A	30mA	RKP 1P+N D32A 30mA	06220199R0	60
	100mA	RKP 1P+N D32A 100mA	06220200R0	60
	300mA	RKP 1P+N D32A 300mA	06220201R0	60

RKS type

Certificate

RKS 1+N

Technical data

Standard		Confirming to IEC 61009
Approval		SEMKO CB, CE, SABS
Protection		Ground fault and overcurrent
Rated current in		6, 10, 16, 20, 25, 32A
Rated voltage		230VAC
Breaking capacity		10kA
Characteristic		B, C Curve
Rated residual operating current		30,100mA
Number of poles		1P+N
Type of trip	**Ground fault**	Electronic
	Overcurrent	Thermal-magnetic
Terminal		Lug type (Cables up to 10mm^2)
Mount		35mm DIN rail
Width		18mm
Electrical endurance		4,000 operations

RKS B Curve

In	I△n	Model	Order No.	Pack. unit (Pcs.)
6A	30mA	RKS 1P+N B6A 30mA	06220395R0	50
	100mA	RKS 1P+N B6A 100mA	06220396R0	50
10A	30mA	RKS 1P+N B10A 30mA	06220397R0	50
	100mA	RKS 1P+N B10A 100mA	06220398R0	50
16A	30mA	RKS 1P+N B16A 30mA	06220399R0	50
	100mA	RKS 1P+N B16A 100mA	06220400R0	50
20A	30mA	RKS 1P+N B20A 30mA	06220401R0	50
	100mA	RKS 1P+N B20A 100mA	06220402R0	50
25A	30mA	RKS 1P+N B25A 30mA	06220403R0	50
	100mA	RKS 1P+N B25A 100mA	06220404R0	50
32A	30mA	RKS 1P+N B32A 30mA	06220405R0	50
	100mA	RKS 1P+N B32A 100mA	06220406R0	50

RKS C Curve

In	I△n	Model	Order No.	Pack. unit (Pcs.)
6A	30mA	RKS 1P+N C6A 30mA	06220407R0	50
	100mA	RKS 1P+N C6A 100mA	06220408R0	50
10A	30mA	RKS 1P+N C10A 30mA	06220409R0	50
	100mA	RKS 1P+N C10A 100mA	06220410R0	50
16A	30mA	RKS 1P+N C16A 30mA	06220411R0	50
	100mA	RKS 1P+N C16A 100mA	06220412R0	50
20A	30mA	RKS 1P+N C20A 30mA	06220413R0	50
	100mA	RKS 1P+N C20A 100mA	06220414R0	50
25A	30mA	RKS 1P+N C25A 30mA	06220415R0	50
	100mA	RKS 1P+N C25A 100mA	06220416R0	50
32A	30mA	RKS 1P+N C32A 30mA	06220417R0	50
	100mA	RKS 1P+N C32A 100mA	06220418R0	50

RKS-b type

Certificate

RKS-b 1+N

Technical data

Standard		Confirming to IEC 61009
Approval		SEMKO CB, CE
Protection		Ground fault and overcurrent
Rated current in		6, 10, 16, 20, 25, 32, 40, 50A
Rated voltage		240VAC
Breaking capacity		10kA
Characteristic		B, C Curve
Rated residual operating current		30,100mA
Number of poles		1P+N
Type of trip	**Ground fault**	Electronic
	Overcurrent	Thermal-magnetic
Terminal		Lug type (Cables up to 10mm^2)
Mount		35mm DIN rail
Width		18mm
Electrical endurance		4,000 operations

RKS B Curve

In	I△n	Model	Order No.	Pack. unit (Pcs.)
6A	30mA	RKS-b 1P+N C6A 30mA	06220615R0	50
	100mA	RKS-b 1P+N C6A 100mA	06220616R0	50
10A	30mA	RKS-b 1P+N C10A 30mA	06220617R0	50
	100mA	RKS-b 1P+N C10A 100mA	06220618R0	50
16A	30mA	RKS-b 1P+N C16A 30mA	06220619R0	50
	100mA	RKS-b 1P+N C16A 100mA	06220620R0	50
20A	30mA	RKS-b 1P+N C20A 30mA	06220621R0	50
	100mA	RKS-b 1P+N C20A 100mA	06220622R0	50
25A	30mA	RKS-b 1P+N C25A 30mA	06220623R0	50
	100mA	RKS-b 1P+N C25A 100mA	06220624R0	50
32A	30mA	RKS-b 1P+N C32A 30mA	06220625R0	50
	100mA	RKS-b 1P+N C32A 100mA	06220626R0	50
40A	30mA	RKS-b 1P+N C40A 30mA	06220627R0	50
	100mA	RKS-b 1P+N C40A 100mA	06220628R0	50
50A	30mA	RKS-b 1P+N C50A 30mA	06220629R0	50
	100mA	RKS-b 1P+N C50A 100mA	06220630R0	50

RKS C Curve

In	I△n	Model	Order No.	Pack. unit (Pcs.)
6A	30mA	RKS-b 1P+N C6A 30mA	06220647R0	50
	100mA	RKS-b 1P+N C6A 100mA	06220648R0	50
10A	30mA	RKS-b 1P+N C10A 30mA	06220649R0	50
	100mA	RKS-b 1P+N C10A 100mA	06220650R0	50
16A	30mA	RKS-b 1P+N C16A 30mA	06220651R0	50
	100mA	RKS-b 1P+N C16A 100mA	06220652R0	50
20A	30mA	RKS-b 1P+N C20A 30mA	06220653R0	50
	100mA	RKS-b 1P+N C20A 100mA	06220654R0	50
25A	30mA	RKS-b 1P+N C25A 30mA	06220655R0	50
	100mA	RKS-b 1P+N C25A 100mA	06220656R0	50
32A	30mA	RKS-b 1P+N C32A 30mA	06220657R0	50
	100mA	RKS-b 1P+N C32A 100mA	06220658R0	50
40A	30mA	RKS-b 1P+N C40A 30mA	06220659R0	50
	100mA	RKS-b 1P+N C40A 100mA	06220660R0	50
50A	30mA	RKS-b 1P+N C50A 30mA	06220661R0	50
	100mA	RKS-b 1P+N C50A 100mA	06220662R0	50

RKC type

Certificate

RKC 1+N

Technical data

Standard		Confirming to IEC 61009
Approval		BV CB
Protection		Ground fault and overcurrent
Rated current in		6, 10, 16, 20, 25, 32A
Rated voltage		240VAC
Breaking capacity		6kA (32A 4.5kA)
Characteristic		B, C Curve
Rated residual operating current		10, 30mA
Number of poles		1P+N
Type of trip	**Ground fault**	Electronic
	Overcurrent	Thermal-magnetic
Terminal		Lug type (Cables up to 10mm^2)
Mount		35mm DIN rail
Width		18mm
Electrical endurance		4,000 operations

RKC B Curve AC type new ROGY

In	I△n	Model	Order No.	Pack. unit (Pcs.)
6A	10mA	RKC 1P+N B6A 10mA 6kA	06221020R0	12
	30mA	RKC 1P+N B6A 30mA 6kA	06221026R0	12
10A	10mA	RKC 1P+N B10A 10mA 6kA	06221021R0	12
	30mA	RKC 1P+N B10A 30mA 6kA	06221027R0	12
16A	10mA	RKC 1P+N B16A 10mA 6kA	06221022R0	12
	30mA	RKC 1P+N B16A 30mA 6kA	06221028R0	12
20A	10mA	RKC 1P+N B20A 10mA 6kA	06221023R0	12
	30mA	RKC 1P+N B20A 30mA 6kA	06221029R0	12
25A	10mA	RKC 1P+N B25A 10mA 6kA	06221024R0	12
	30mA	RKC 1P+N B25A 30mA 6kA	06221030R0	12
32A	10mA	RKC 1P+N B32A 10mA 4.5kA	06221025R0	12
	30mA	RKC 1P+N B32A 30mA 4.5kA	06221031R0	12

RKC C Curve AC type new ROGY

In	I△n	Model	Order No.	Pack. unit (Pcs.)
6A	10mA	RKC 1P+N C6A 10mA 6kA	06221032R0	12
	30mA	RKC 1P+N C6A 30mA 6kA	06221038R0	12
10A	10mA	RKC 1P+N C10A 10mA 6kA	06221033R0	12
	30mA	RKC 1P+N C10A 30mA 6kA	06221039R0	12
16A	10mA	RKC 1P+N C16A 10mA 6kA	06221034R0	12
	30mA	RKC 1P+N C16A 30mA 6kA	06221040R0	12
20A	10mA	RKC 1P+N C20A 10mA 6kA	06221035R0	12
	30mA	RKC 1P+N C20A 30mA 6kA	06221041R0	12
25A	10mA	RKC 1P+N C25A 10mA 6kA	06221036R0	12
	30mA	RKC 1P+N C25A 30mA 6kA	06221042R0	12
32A	10mA	RKC 1P+N C32A 10mA 4.5kA	06221037R0	12
	30mA	RKC 1P+N C32A 30mA 4.5kA	06221043R0	12

RKC type

Certificate

RKC 1+N

RKC B Curve A type new ROGY

In	I△n	Model	Order No.	Pack. unit (Pcs.)
6A	10mA	RKC 1P+N B6A 10mA 6kA	06221044R0	12
	30mA	RKC 1P+N B6A 30mA 6kA	06221050R0	12
10A	10mA	RKC 1P+N B10A 10mA 6kA	06221045R0	12
	30mA	RKC 1P+N B10A 30mA 6kA	06221051R0	12
16A	10mA	RKC 1P+N B16A 10mA 6kA	06221046R0	12
	30mA	RKC 1P+N B16A 30mA 6kA	06221052R0	12
20A	10mA	RKC 1P+N B20A 10mA 6kA	06221047R0	12
	30mA	RKC 1P+N B20A 30mA 6kA	06221053R0	12
25A	10mA	RKC 1P+N B25A 10mA 6kA	06221048R0	12
	30mA	RKC 1P+N B25A 30mA 6kA	06221054R0	12
32A	10mA	RKC 1P+N B32A 10mA 4.5kA	06221049R0	12
	30mA	RKC 1P+N B32A 30mA 4.5kA	06221055R0	12

RKC C Curve A type new ROGY

In	I△n	Model	Order No.	Pack. unit (Pcs.)
6A	10mA	RKC 1P+N C6A 10mA 6kA	06221056R0	12
	30mA	RKC 1P+N C6A 30mA 6kA	06221062R0	12
10A	10mA	RKC 1P+N C10A 10mA 6kA	06221057R0	12
	30mA	RKC 1P+N C10A 30mA 6kA	06221063R0	12
16A	10mA	RKC 1P+N C16A 10mA 6kA	06221058R0	12
	30mA	RKC 1P+N C16A 30mA 6kA	06221064R0	12
20A	10mA	RKC 1P+N C20A 10mA 6kA	06221059R0	12
	30mA	RKC 1P+N C20A 30mA 6kA	06221065R0	12
25A	10mA	RKC 1P+N C25A 10mA 6kA	06221060R0	12
	30mA	RKC 1P+N C25A 30mA 6kA	06221066R0	12
32A	10mA	RKC 1P+N C32A 10mA 4.5kA	06221061R0	12
	30mA	RKC 1P+N C32A 30mA 4.5kA	06221067R0	12

KGR type

Certificate

32KGRc/d

Technical data

Type		32KGRc	32KGRd
Protection		Ground fault and overcurrent	
Rated current in		15, 20, 30A	
Rated residual current			
	Operating, $I_{\triangle n}$	15, 30mA (Non-adjustable)	
	Non-operating, $I_{\triangle no}$	$0.5I_{\triangle n}$	
Number of poles		2pole	
Rated voltage		110/220VAC	
Residual current off-time		≤ 0.03 sec.	
Standard		IEC 61009, KS	
Approval		CCC CB	
Type of trip			
	Ground fault	Electronic	
	Overcurrent	Bimetallic	
Breaking capacity		1.5kA	2.5kA
Electrical endurance		4,000 operations	
Mount		On 35mm DIN rail	
Width		35mm	
Terminal		Screw clamp type (Cable up to 5.5mm²)	

32KGRc type

In	$I_{\triangle n}$	Model	Order No.	Pack. unit (Pcs.)
15A	15mA	32KGRc 15A 15mA 0.03S	0750000400	60
	30mA	32KGRc 15A 30mA 0.03S	0750000100	60
20A	15mA	32KGRc 20A 15mA 0.03S	0750000500	60
	30mA	32KGRc 20A 30mA 0.03S	0750000200	60
30A	15mA	32KGRc 30A 15mA 0.03S	0750000600	60
	30mA	32KGRc 30A 30mA 0.03S	0750000300	60

32KGRd type

In	$I_{\triangle n}$	Model	Order No.	Pack. unit (Pcs.)
15A	15mA	32KGRd 15A 15mA 0.03S	0748001000	60
	30mA	32KGRd 15A 30mA 0.03S	0748001100	60
20A	15mA	32KGRd 20A 15mA 0.03S	0748001200	60
	30mA	32KGRd 20A 30mA 0.03S	0748001300	60
30A	15mA	32KGRd 30A 15mA 0.03S	0748001400	60
	30mA	32KGRd 30A 30mA 0.03S	0748001500	60

GRh type

Certificate

32KGRc/d

Technical data

Type	32GRhc	32GRhd
Protection	Ground fault and overcurrent	
Rated current in	15, 20, 30A	
Rated residual current		
Operating, $I_{\triangle n}$	15, 30mA (Non-adjustable)	
Non-operating, $I_{\triangle no}$	$0.5I_{\triangle n}$	
Number of poles	2pole	
Rated voltage	110/220VAC	
Residual current off-time	≤ 0.03 sec.	
Standard	KS	
Type of trip		
Ground fault	Electronic	
Overcurrent	Bimetallic	
Breaking capacity	1.5kA	2.5kA
Electrical endurance	4,000 operations	
Mount	On 35mm DIN rail	
Width	35mm	
Terminal	Screw clamp type (Cable up to 5.5mm^2)	

DIN rail & Screw type

BS type

Certificate

BS32c/d

Technical data

Type	BS32c	BS32d
Protection	Ground fault and overcurrent	
Rated current in	6, 10, 15, 20, 30A	10, 15, 20, 30A
Rated residual current		
Operating, $I_{\triangle n}$	15, 30mA (Non-adjustable)	
Non-operating, $I_{\triangle no}$	$0.5I_{\triangle n}$	
Number of poles	2pole	
Rated voltage	110/220VAC	
Residual current off-time	≤ 0.03 sec.	
Standard	IEC 60898, KS	
Approval	CCC CB	
Type of trip		
Ground fault	Electronic	
Overcurrent	Bimetallic	
Breaking capacity	1.5kA	2.5kA
Electrical endurance	4,000 operations	
Mount	On 35mm DIN rail	
Width	35mm	
Terminal	Screw clamp type (Cable up to 5.5mm^2)	

RKN type

Certificate

Technical data

Standard		Confirming to IEC61008
Protection		Ground fault
Rated current in		25. 32, 40, 63A
Number of poles		2 (1+N), 4 (3+N)pole
Rated sensitivity currents, $I_{\triangle n}$		30, 100, 300mA
Rated residual non-operating current		$0.5 \times I_{\triangle n}$
Rated voltages	2pole	240VAC
	4pole	240/415VAC
Residual current off-time at $I_{\triangle n}$		≤ 0.1s
Rated making capacity, Im		500A for In=25, 32, 40A 630A for In=63A
Rated conditional short-circuit current, Inc		6kA for In=25, 32, 40, 63A
Type of trip		Electro-magnetic
Type of terminal		Lug type
Terminal capacity		Cables up to 35mm²
Installation		35mm DIN rail
Type of operation		A/AC
Slot size		45mm

Order No.

Pole	In	$I_{\triangle n}$	Model	Order No.	Pack. unit (Pcs.)
1P+N	25A	30mA	RKN 1P+N 25A 30mA	06220103R0	60
	32A		RKN 1P+N 32A 30mA	06220106R0	60
	40A		RKN 1P+N 40A 30mA	06220109R0	60
	63A		RKN 1P+N 63A 30mA	06220112R0	60
	25A	100mA	RKN 1P+N 25A 100mA	06220104R0	60
	32A		RKN 1P+N 32A 100mA	06220107R0	60
	40A		RKN 1P+N 40A 100mA	06220110R0	60
	63A		RKN 1P+N 63A 100mA	06220113R0	60
	25A	300mA	RKN 1P+N 25A 300mA	06220105R0	60
	32A		RKN 1P+N 32A 300mA	06220108R0	60
	40A		RKN 1P+N 40A 300mA	06220111R0	60
	63A		RKN 1P+N 63A 300mA	06220114R0	60

Pole	In	$I_{\triangle n}$	Model	Order No.	Pack. unit (Pcs.)
3P+N	25A	30mA	RKN 3P+N 25A 30mA	06240013R0	30
	32A		RKN 3P+N 32A 30mA	06240016R0	30
	40A		RKN 3P+N 40A 30mA	06240019R0	30
	63A		RKN 3P+N 63A 30mA	06240022R0	30
	25A	100mA	RKN 3P+N 25A 100mA	06240014R0	30
	32A		RKN 3P+N 32A 100mA	06240017R0	30
	40A		RKN 3P+N 40A 100mA	06240020R0	30
	63A		RKN 3P+N 63A 100mA	06240023R0	30
	25A	300mA	RKN 3P+N 25A 300mA	06240015R0	30
	32A		RKN 3P+N 32A 300mA	06240018R0	30
	40A		RKN 3P+N 40A 300mA	06240021R0	30
	63A		RKN 3P+N 63A 300mA	06240024R0	30

RKN type

A type

Pole	In	I△n	Model	Order No.	Pack. unit (Pcs.)
1P+N	25A	30mA	RKN 1P+N 25A 30mA A type	06220444R0	60
	32A		RKN 1P+N 32A 30mA A type	06220447R0	60
	40A		RKN 1P+N 40A 30mA A type	06220450R0	60
	63A		RKN 1P+N 63A 30mA A type	06220453R0	60
	25A	100mA	RKN 1P+N 25A 100mA A type	06220445R0	60
	32A		RKN 1P+N 32A 100mA A type	06220448R0	60
	40A		RKN 1P+N 40A 100mA A type	06220451R0	60
	63A		RKN 1P+N 63A 100mA A type	06220454R0	60
	25A	300mA	RKN 1P+N 25A 300mA A type	06220446R0	60
	32A		RKN 1P+N 32A 300mA A type	06220449R0	60
	40A		RKN 1P+N 40A 300mA A type	06220452R0	60
	63A		RKN 1P+N 63A 300mA A type	06220455R0	60

Pole	In	I△n	Model	Order No.	Pack. unit (Pcs.)
3P+N	25A	30mA	RKN 3P+N 25A 30mA A type	06220456R0	30
	32A		RKN 3P+N 32A 30mA A type	06220459R0	30
	40A		RKN 3P+N 40A 30mA A type	06220462R0	30
	63A		RKN 3P+N 63A 30mA A type	06220465R0	30
	25A	100mA	RKN 3P+N 25A 100mA A type	06220457R0	30
	32A		RKN 3P+N 32A 100mA A type	06220460R0	30
	40A		RKN 3P+N 40A 100mA A type	06220463R0	30
	63A		RKN 3P+N 63A 100mA A type	06220466R0	30
	25A	300mA	RKN 3P+N 25A 300mA A type	06220458R0	30
	32A		RKN 3P+N 32A 300mA A type	06220461R0	30
	40A		RKN 3P+N 40A 300mA A type	06220464R0	30
	63A		RKN 3P+N 63A 300mA A type	06220467R0	30

RKN-b type

Certificate

Technical data

Standard		Confirming to IEC61008	
Protection		Ground fault	
Rated current in		**63AF:** 25, 40, 63A	**100AF:** 80, 100A
Number of poles		2 (1+N), 4 (3+N)pole	
Rated sensitivity currents, I△n		30, 100, 300mA	
Rated residual non-operating current		0.5×I△n	
Rated voltages	**2pole**	240VAC	
	4pole	240/415VAC	
Residual current off-time at I△n		≤ 0.1s	
Rated making capacity, Im		500A for In=25, 32, 40A 630A for In=63A 800A for In=80A 1000A for In=100A	
Rated conditional short-circuit current, Inc		10kA for In=25, 40, 63, 80, 100A	
Type of trip		Electro-magnetic	
Type of terminal		Lug type	
Terminal capacity		Cables up to 35mm^2	
Installation		35mm DIN rail	
Type of operation		A/AC	
Slot size		45mm	

Order No.

Pole	In	I△n	Model	Order No.	Pack. unit (Pcs.)
1P+N	25A	30mA	RKN-b 1P+N 25A 30mA	06220663R0	60
	40A		RKN-b 1P+N 40A 30mA	06220669R0	60
	63A		RKN-b 1P+N 63A 30mA	06220672R0	60
	80A		RKN-b 1P+N 80A 30mA	06220678R0	60
	100A		RKN-b 1P+N 100A 30mA	06220681R0	60
	25A	100mA	RKN-b 1P+N 25A 100mA	06220664R0	60
	40A		RKN-b 1P+N 40A 100mA	06220670R0	60
	63A		RKN-b 1P+N 63A 100mA	06220673R0	60
	80A		RKN-b 1P+N 80A 100mA	06220679R0	60
	100A		RKN-b 1P+N 100A 100mA	06220682R0	60
	25A	300mA	RKN-b 1P+N 25A 300mA	06220665R0	60
	40A		RKN-b 1P+N 40A 300mA	06220671R0	60
	63A		RKN-b 1P+N 63A 300mA	06220674R0	60
	80A		RKN-b 1P+N 80A 300mA	06220680R0	60
	100A		RKN-b 1P+N 100A 300mA	06220683R0	60

Pole	In	I△n	Model	Order No.	Pack. unit (Pcs.)
3P+N	25A	30mA	RKN-b 3P+N 25A 100mA	06240095R0	30
	40A		RKN-b 3P+N 40A 100mA	06240101R0	30
	63A		RKN-b 3P+N 63A 100mA	06240104R0	30
	80A		RKN-b 3P+N 80A 100mA	06240110R0	30
	100A		RKN-b 3P+N 100A 100mA	06240113R0	30
	25A	100mA	RKN-b 3P+N 25A 300mA	06240096R0	30
	40A		RKN-b 3P+N 40A 300mA	06240102R0	30
	63A		RKN-b 3P+N 63A 300mA	06240105R0	30
	80A		RKN-b 3P+N 80A 300mA	06240111R0	30
	100A		RKN-b 3P+N 100A 300mA	06240114R0	30
	25A	300mA	RKN-b 3P+N 25A 300mA	06240096R0	30
	40A		RKN-b 3P+N 40A 300mA	06240102R0	30
	63A		RKN-b 3P+N 63A 300mA	06240105R0	30
	80A		RKN-b 3P+N 80A 300mA	06240111R0	30
	100A		RKN-b 3P+N 100A 300mA	06240114R0	30

RKN-b type

A type

Pole	In	I△n	Model	Order No.	Pack. unit (Pcs.)
1P+N	25A	30mA	RKN-b 1P+N 25A 30mA A type	06220749R0	60
	40A		RKN-b 1P+N 40A 30mA A type	06220755R0	60
	63A		RKN-b 1P+N 63A 30mA A type	06220758R0	60
	25A	100mA	RKN-b 1P+N 25A 100mA A type	06220750R0	60
	40A		RKN-b 1P+N 40A 100mA A type	06220756R0	60
	63A		RKN-b 1P+N 63A 100mA A type	06220759R0	60
	25A	300mA	RKN-b 1P+N 25A 300mA A type	06220751R0	60
	40A		RKN-b 1P+N 40A 300mA A type	06220757R0	60
	63A		RKN-b 1P+N 63A 300mA A type	06220760R0	60

Pole	In	I△n	Model	Order No.	Pack. unit (Pcs.)
3P+N	25A	30mA	RKN-b 3P+N 25A 30mA A type	06240148R0	30
	40A		RKN-b 3P+N 40A 30mA A type	06240154R0	30
	63A		RKN-b 3P+N 63A 30mA A type	06240157R0	30
	25A	100mA	RKN-b 3P+N 25A 100mA A type	06240149R0	30
	40A		RKN-b 1P+N 40A 100mA A type	06240155R0	30
	63A		RKN-b 3P+N 63A 100mA A type	06240158R0	30
	25A	300mA	RKN-b 3P+N 25A 300mA A type	06240150R0	30
	40A		RKN-b 3P+N 40A 300mA A type	06240156R0	30
	63A		RKN-b 3P+N 63A 300mA A type	06240159R0	30

Rated conditional short-circuit capacity

RCCB (RKN, RKN-b)		With MCB		
		BKN 1~63A (B, C, D)	BKN-b 1~63A (B, C, D)	BKH 63~125A (C, D)
1P+N	25A	6kA	10kA	-
	32A	6kA	10kA	-
	40A	6kA	10kA	-
	63A	6kA	10kA	10kA
	80A	-	-	10kA
	100A	-	-	10kA
3P+N	25A	6kA	10kA	-
	32A	6kA	10kA	-
	40A	6kA	10kA	-
	63A	6kA	10kA	10kA
	80A	-	-	10kA
	100A	-	-	10kA

Isolator

Isolator, BKD type

Certificate

Technical data

Number of poles	1, 2, 3, 4pole	
Standard	IEC60947-3	
Rated currents	40, 50, 63, 80, 100, 125A	
Rated voltages	230/400VAC	
Electrical endurance	63, 80, 100A	1,500 operations
	125A	1,000 operations
Type of terminal	Lug type	
Terminal capacity	Cables up to 50mm^2	
Installation	Mounting on 35mm DIN rail	
Width	17.5mm per pole	

Order No.

Pole	In	Model	Order No.	Pack. unit (Pcs.)
1P	63A	BKD 1P 63A	06110083R0	120
	80A	BKD 1P 80A	06110084R0	120
	100A	BKD 1P 100A	06110085R0	120
	125A	BKD 1P 125A	06110114R0	120

Pole	In	Model	Order No.	Pack. unit (Pcs.)
2P	63A	BKD 2P 63A	06120247R0	60
	80A	BKD 2P 80A	06120248R0	60
	100A	BKD 2P 100A	06120249R0	60
	125A	BKD 2P 125A	06120306R0	60

Pole	In	Model	Order No.	Pack. unit (Pcs.)
3P	63A	BKD 3P 63A	06130063R0	40
	80A	BKD 3P 80A	06130064R0	40
	100A	BKD 3P 100A	06130065R0	40
	125A	BKD 3P 125A	06130094R0	40

Pole	In	Model	Order No.	Pack. unit (Pcs.)
4P	63A	BKD 4P 63A	06140130R0	30
	80A	BKD 4P 80A	06140131R0	30
	100A	BKD 4P 100A	06140132R0	30
	125A	BKD 4P 125A	06140187R0	30

60mm depth Miniature Circuit Breakers

BF type

BF-a, BF-c

Description

- Trip unit with a fixed thermal and fixed magnetic trip
- All operating mechanisms are of the quick-make, quick-break type and "trip free"
- Two and three-pole breakers shall have common tripping of allpoles.
- Operating handle is "Trip to Off"
- Operating hand and face plate shall indicate rated ampacity.
- Thermal elements shall be calibrated to operate in a 40℃ ambient environment in standard.
- Electrical durability: 10,000 operations at In
- Reference temperature: 40℃
- Connection by clamp terminal
- Offering the same slot and depth size with the GB type MCCBs.
  - 60mm depth
  - 50mm slot

Technical data

Type		BF-a	BF-c
Rated current		10~100A	10~100A
Breaking capacity, Icu	240V	10kA	5kA
	415V	2.5kA (2, 3pole)	2.5kA (2, 3pole)
Rated insulation voltage		460VAC	
Number of poles		1, 2, 3pole	
Standard		IEC 60947-2	
Protection		Overload and short circuit	
Characteristic		See operating curves (p. 44)	
Type of trip		Thermal magnetic release	
Type of terminal		Clamp type	
Installation		Holder mounting (Bolt on with fixing brackets)	
Electrical endurance		1,500 operations	
Width		25mm per pole	
Slot		50mm	
Accessory		Not available	

BF type

BF-a (10kA at 240VAC / 2.5kA at 415VAC)

1Pole					2Pole					3Pole				
In	Model	Order No.	Pack. unit (Pcs.)	Price	Model	Order No.	Pack. unit (Pcs.)	Price		Model	Order No.	Pack. unit (Pcs.)	Price	
10A	BF51a 10A	0607005100	60		BF52a 10A	0607006500	30			BF53a 10A	0607007900	20		
15A	BF51a 15A	0607005200	60		BF52a 15A	0607006600	30			BF53a 15A	0607008000	20		
20A	BF51a 20A	0607005300	60		BF52a 20A	0607006700	30			BF53a 20A	0607008100	20		
30A	BF51a 30A	0607005400	60		BF52a 30A	0607006800	30			BF53a 30A	0607008200	20		
40A	BF51a 40A	0607005500	60		BF52a 40A	0607006900	30			BF53a 40A	0607008300	20		
50A	BF51a 50A	0607005600	60		BF52a 50A	0607007000	30			BF53a 50A	0607008400	20		
60A	BF101a 60A	0608002100	60		BF102a 60A	0608002700	30			BF103a 60A	0608003300	20		
75A	BF101a 75A	0608002200	60		BF102a 75A	0608002800	30			BF103a 75A	0608003400	20		
100A	BF101a 100A	0608002300	60		BF102a 100A	0608002900	30			BF103a 100A	0608003500	20		
Weight/pc		0.11kg				0.23kg					0.35kg			

BF-c (For 5kA at 240VAC / 2.5kA at 415VAC)

1Pole					2Pole					3Pole				
In	Model	Order No.	Pack. unit (Pcs.)	Price	Model	Order No.	Pack. unit (Pcs.)	Price		Model	Order No.	Pack. unit (Pcs.)	Price	
10A	BF51c 10A	0607005800	60		BF52c 10A	0607007200	30			BF53c 10A	0607008600	20		
15A	BF51c 15A	0607005900	60		BF52c 15A	0607007300	30			BF53c 15A	0607008700	20		
20A	BF51c 20A	0607006000	60		BF52c 20A	0607007400	30			BF53c 20A	0607008800	20		
30A	BF51c 30A	0607006100	60		BF52c 30A	0607007500	30			BF53c 30A	0607008900	20		
40A	BF51c 40A	0607006200	60		BF52c 40A	0607007600	30			BF53c 40A	0607009000	20		
50A	BF51c 50A	0607006300	60		BF52c 50A	0607007700	30			BF53c 50A	0607009100	20		
60A	BF101c 60A	0608002400	60		BF102c 60A	0608003000	30			BF103c 60A	0608003600	20		
75A	BF101c 75A	0608002500	60		BF102c 75A	0608003100	30			BF103c 75A	0608003700	20		
100A	BF101c 100A	0608002600	60		BF102c 100A	0608003200	30			BF103c 100A	0608003800	20		
Weight/pc		0.11kg				0.23kg					0.35kg			

Standard busbars

Description

- Applicable to the 18mm wide module devices
- Rated voltage: 415VAC
- Current rating: 63A
- Standard length: 1m

Type BB101

Type BB102

For single pole device

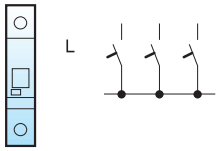

Type BB201

Type BB202

For 2-pole device

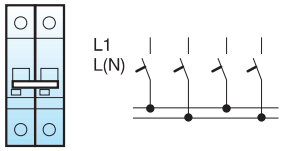

Type BB301

Type BB302

For 3-pole device

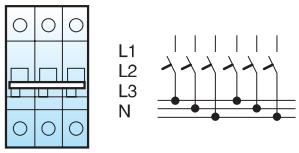

Type BB401

Type BB402

For 4-pole device

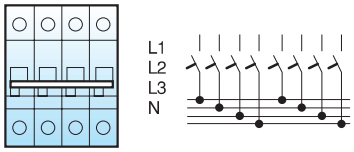

Model	Order No.
Busbar, Type BB101, BKN 1P	70211413001
Busbar, Type BB102, BKM 1P	70211413002
Busbar, Type BB201, BKN 2P	70211413003
Busbar, Type BB202, BKM 2P	70211413004
Busbar, Type BB301, BKN 3P	70211413005
Busbar, Type BB302, BKM 3P	70211413006
Busbar, Type BB401, BKN 4P	70211413007
Busbar, Type BB102, BKM 4P	70211413008

Characteristics curves & temperature compensation

BKN
BKN-b
BKN-c
BKH
BKP
RKP
RKS
RKS-b

Operating curves

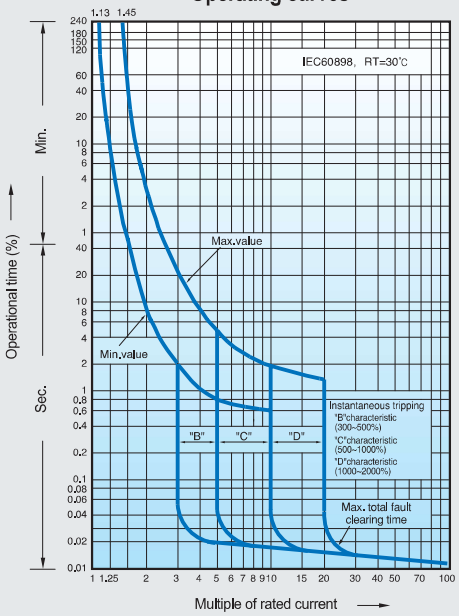

Compensation curves

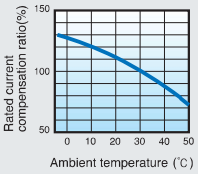

1.BKN, BKN-b, BKN-c, BKP, RKP, RKS, RKS-b

(Temperature compensation table)(IEC60 898-1)

In(A)	20℃	25℃	30℃	35℃	40℃	45℃	50℃	55℃	60℃
1	1.05	1.02	1.0	0.98	0.95	0.93	0.9	0.88	0.85
2	2.08	2.04	2.0	1.96	1.92	1.88	1.84	1.8	1.74
3	3.18	3.09	3.0	2.91	2.82	2.7	2.61	2.49	2.37
4	4.24	4.12	4.0	3.88	3.76	3.64	3.52	3.36	3.24
6	6.24	6.12	6.0	5.88	5.76	5.64	5.52	5.4	5.3
10	10.6	10.3	10.0	9.7	9.3	9.0	8.6	8.2	7.8
16	16.8	16.5	16.0	15.5	15.2	14.7	14.2	13.8	13.3
20	21.0	20.6	20.0	19.4	19.0	18.4	17.8	17.4	16.8
25	26.2	25.7	25.0	24.2	23.7	23.0	22.2	21.5	20.7
32	33.5	32.9	32.0	31.4	30.4	29.8	28.4	28.2	27.5
40	42.0	41.2	40.0	38.8	38.0	36.8	35.6	34.4	33.2
50	52.5	51.5	50.0	48.5	47.4	45.5	44.0	42.5	40.5
63	66.2	64.9	63.0	61.0	58.0	56.7	54.2	51.7	49.2

I1: 113% In, I2: 145% In according to IEC60 898-1

2.BKH

(Temperature compensation table)(IEC60 947-2)

In(A)	20℃	25℃	30℃	35℃	40℃	45℃	50℃	55℃	60℃
6	6.38	6.28	6.19	6.1	6	5.89	5.79	5.68	5.58
10	11	10.7	10.5	10.3	10	9.5	9	8.7	8.5
16	17	16.5	16	16	16	15.5	15	14.5	14
20	22.5	22	21	20.5	20	19	18.5	18	17
25	27	26.5	26	25.5	25	24	23	22.5	22
32	36	35	34	33	32	31	29.5	28	27
40	45.5	44	43	41.5	40	38.5	37	35	33.5
50	57.5	56	54	52	50	48	45.5	43.5	41
63	72.5	70.5	68	65.5	63	60.5	57.5	54.5	51.5
80	92	89	86	83	80	76.5	73.5	69.5	66
100	115	111	108	104	100	96	91.5	87	82.5
125	143.8	138.8	135	130	125	120	114	108.8	103.1

I1: 105% In, I2: 130% In according to IEC60 947-2

32KGRc
32KGRd

Operating curves

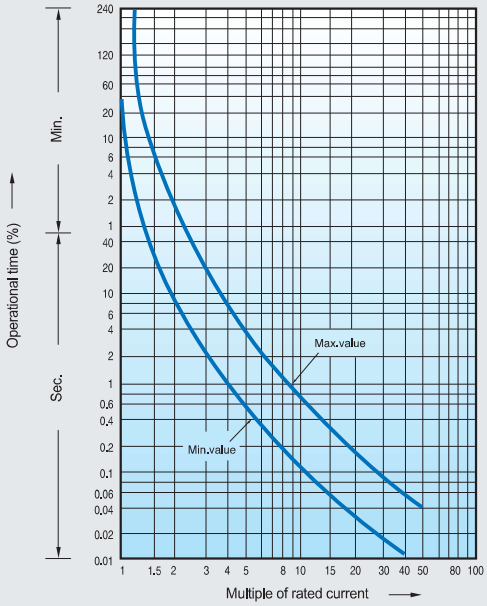

Compensation curves

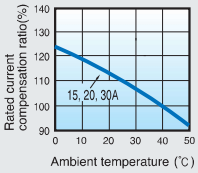

Characteristics curves & temperature compensation

BF-a
BF-c

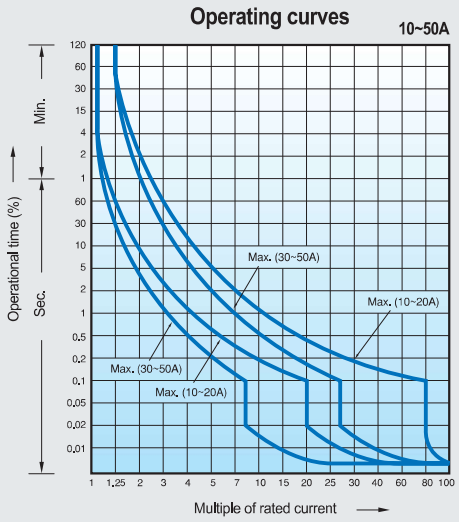

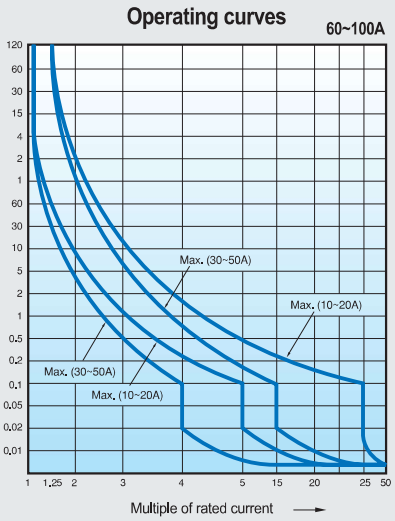

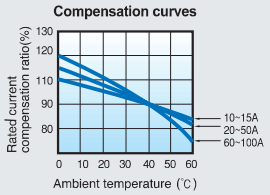

32GRhc
32GRhd

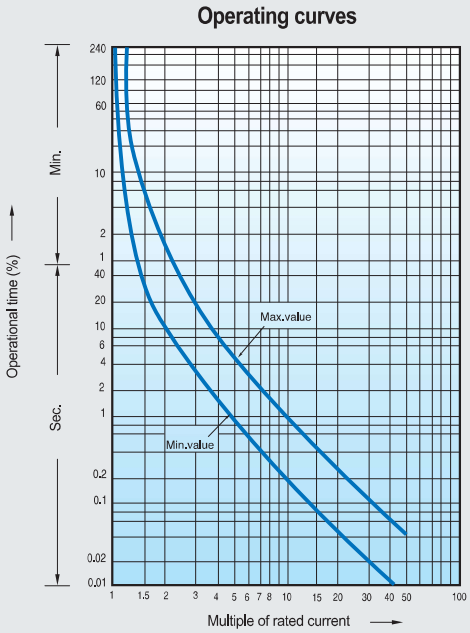

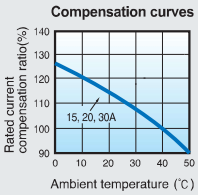

BFN

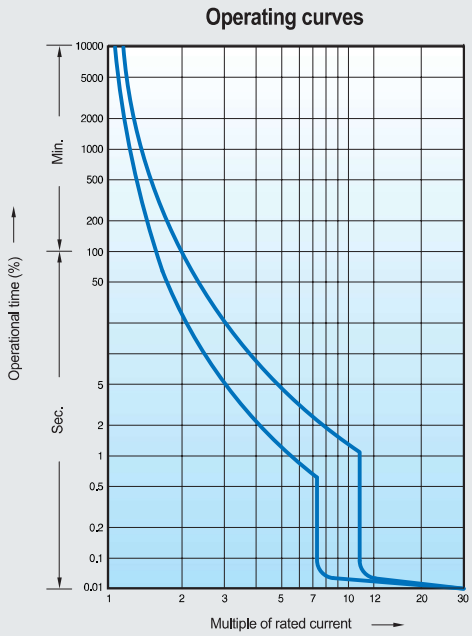
Operating curves
Operational time (%)
Min.
Sec.
10000
5000
2000
1000
500
200
100
50
5
2
1
0.5
0.2
0.1
0.01
1
2
3
5
7
10
12
20
30
Multiple of rated current

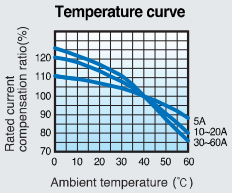
Temperature curve
Rated current compensation ratio(%)
120
110
100
90
80
70
0
10
20
30
40
50
60
5A
10~20A
30~60A
Ambient temperature (℃)

BS

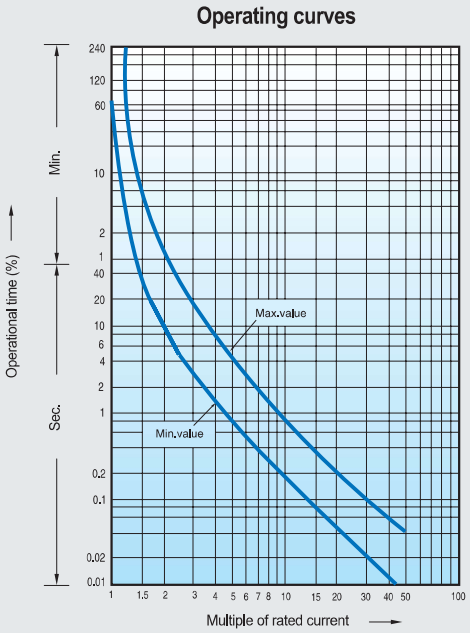
Operating curves
Operational time (%)
Min.
Sec.
240
120
60
10
2
1
40
20
10
6
4
2
1
0.2
0.1
0.02
0.01
Max.value
Min.value
1
1.5
2
3
4
5
6
7
8
10
15
20
30
40
50
100
Multiple of rated current

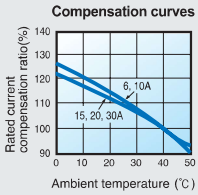
Compensation curves
Rated current compensation ratio(%)
140
130
120
110
100
90
6, 10A
15, 20, 30A
0
10
20
30
40
50
Ambient temperature (℃)

Overall dimensions

BKN

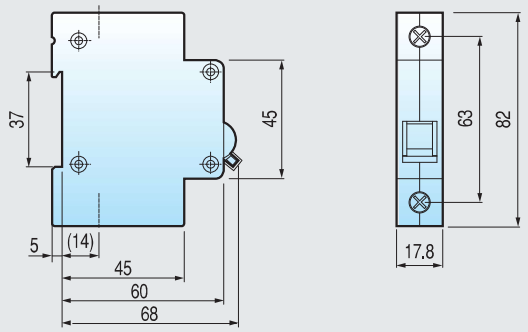

BKN-c

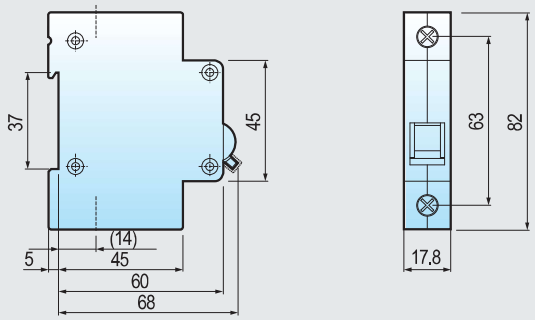

BKN-b

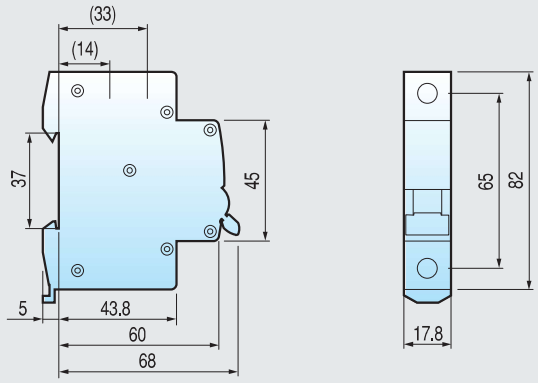

BKH

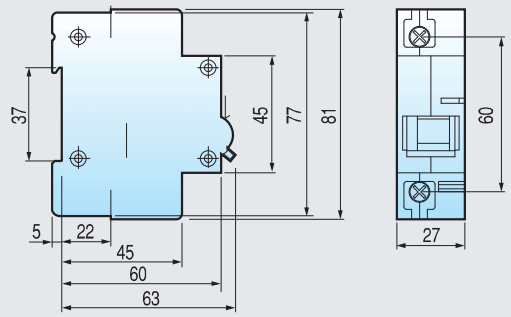

BKP

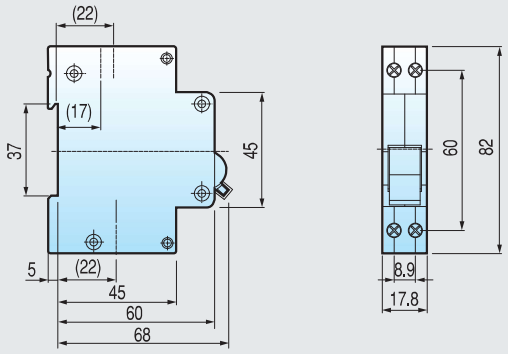

BFN

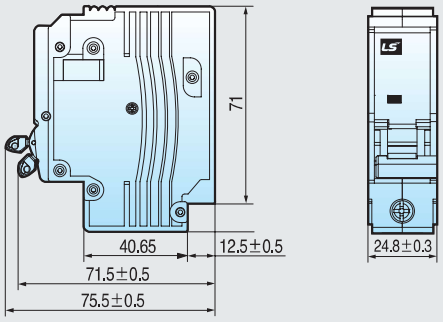

RKP

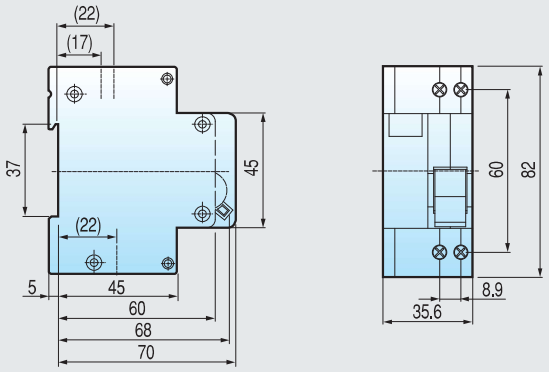

32KGRc/d

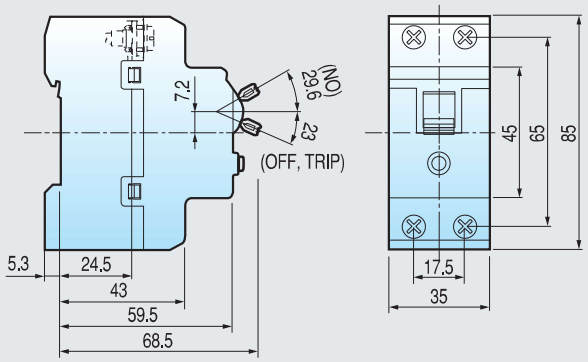

Overall dimensions

RKS
RKS-b

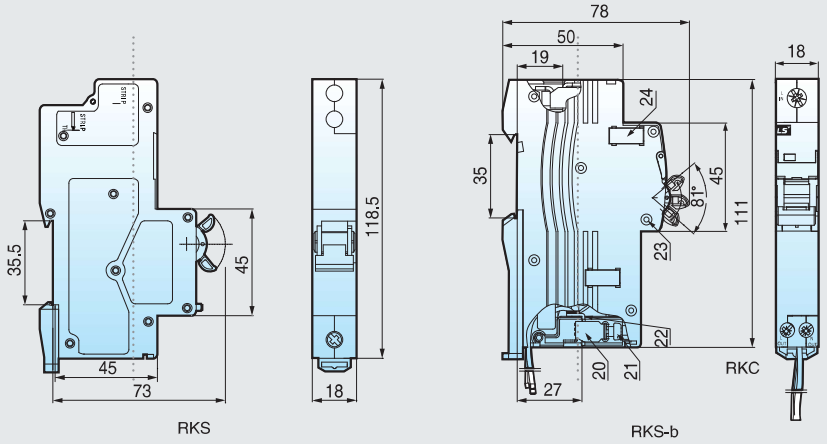

RKC

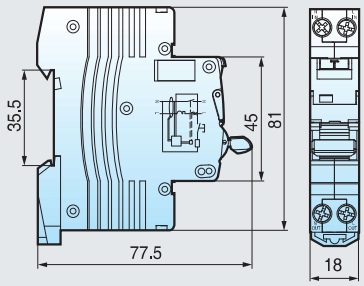

RKN

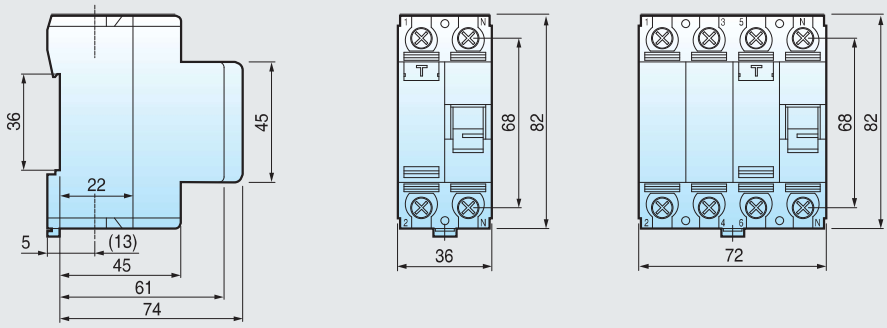

Note. ( ) 63AF.

RKN-b

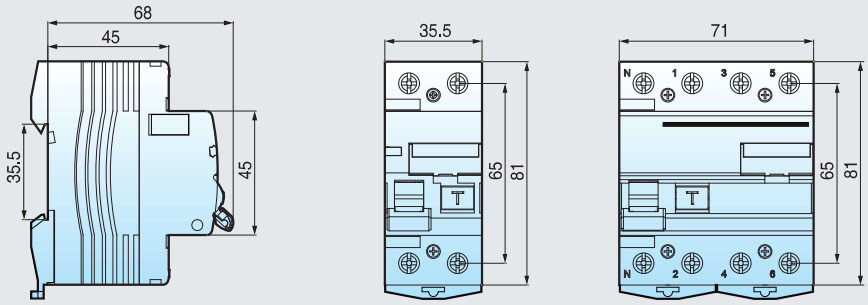

BKD

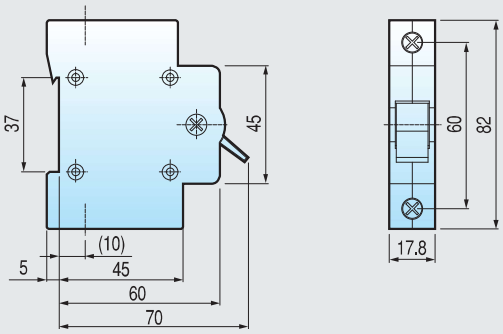

BF-a
BF-c

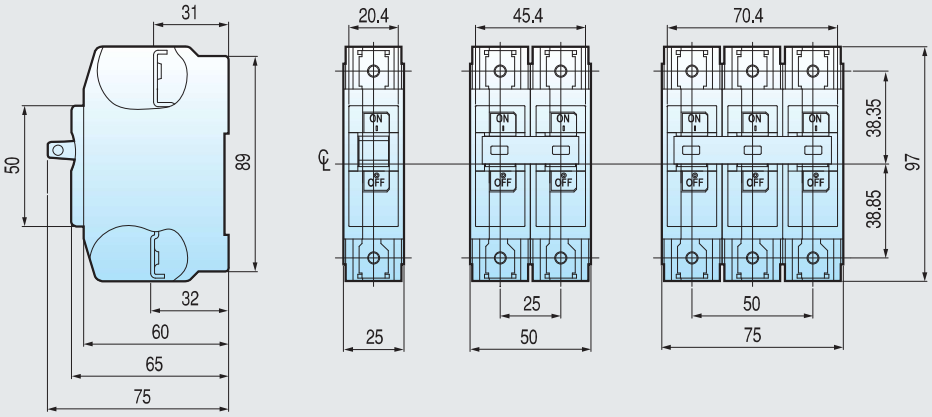

Detailed terminal

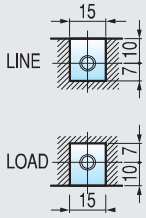

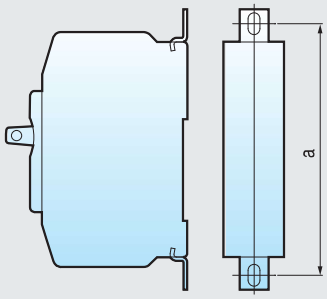

※ BFa, BFc same size (a=99~111mm)

Overall dimensions

32GRhc/d
BS32c/d

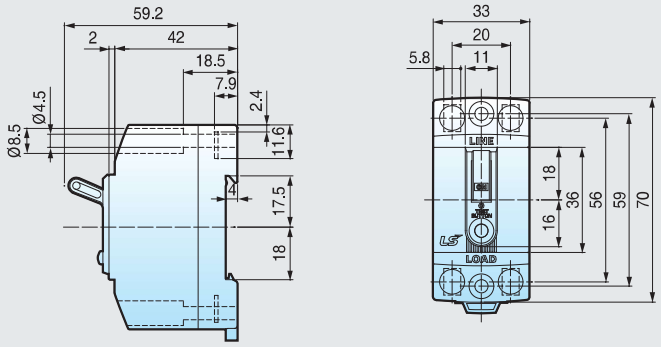

BKN
AX/AL

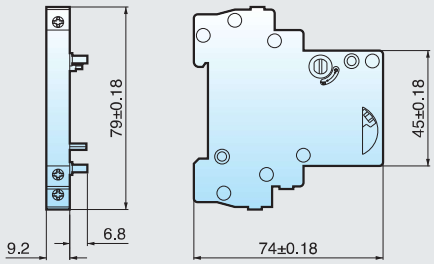

BKN-b
AX/AL

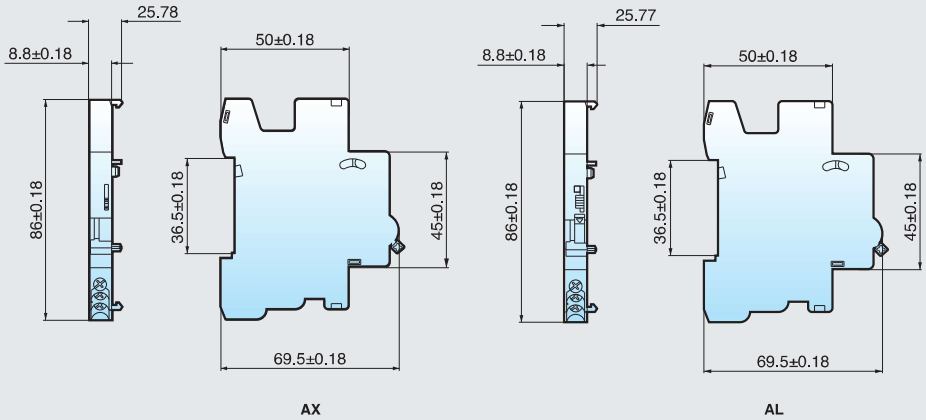

SHT
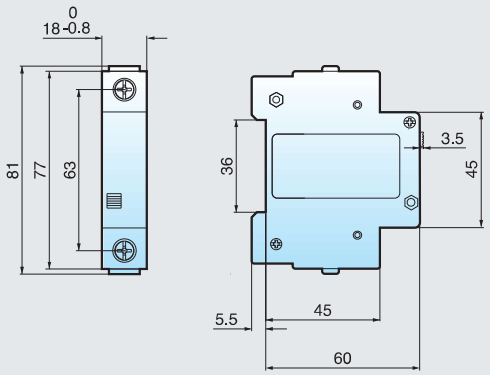
UVT/OVT